THECARGOODS.COM
SUPPORT@THECARGOODS.COM

GINKGO LEAF SERIES

With the light silhouette
of ginkgo leaves and warm light,
it brings a natural touch

https://vakkerlight.com

THECARGOODS.COM
SUPPORT@THECARGOODS.COM

DESIGN INSPIRATION

Ginkgo leaf series lamps integrate modern design concepts with their unique natural aesthetics. Inspired by the streamlined silhouette of ginkgo leaves in autumn, this series of lamps adopts an elegant metallic texture to reproduce the soft lines and delicate texture of the leaves. The soft light shines through the ingenious ginkgo leaf-shaped lamps, projecting rich layers of light and shadow, bringing a picturesque natural atmosphere to the indoor space. Whether it is a chandelier, a wall lamp, or a ceiling lamp, each piece shows delicacy and harmony, adding tranquility and elegance to home life.

THECARGOODS.COM
SUPPORT@THECARGOODS.COM

EXCLUSIVE CUSTOMIZATION

Material

Default: Iron, Electroplating

Customized Options: Brass, Iron

Leaf Default: Ceramic

Note: Ginkgo leaf series lamps can be customized, please contact us if you have any needs

Note*: This product is tailor-made to your specifications. Due to its larger dimensions, standard carriers like UPS or FedEx cannot handle its shipment. Instead, we will utilize freight trucking services to ensure safe delivery to your destination. Please be informed that the shipping duration is estimated to be around 40-50 days. Given this extended delivery time, we advise you to thoroughly consider this factor before finalizing your purchase.

THECARGOODS.COM
SUPPORT@THECARGOODS.COM

Gi lowers Wall Lamp

VKW-

Mat l, Ceramics

Light source base type: G9

Body Finishes: Gold

Shade Finish: White

Size:

Dia 30cm x H 60cm / ∅ 11.8″ x H 23.6″

Dia 80cm x H 80cm / ∅ 31.5″ x H 31.5″

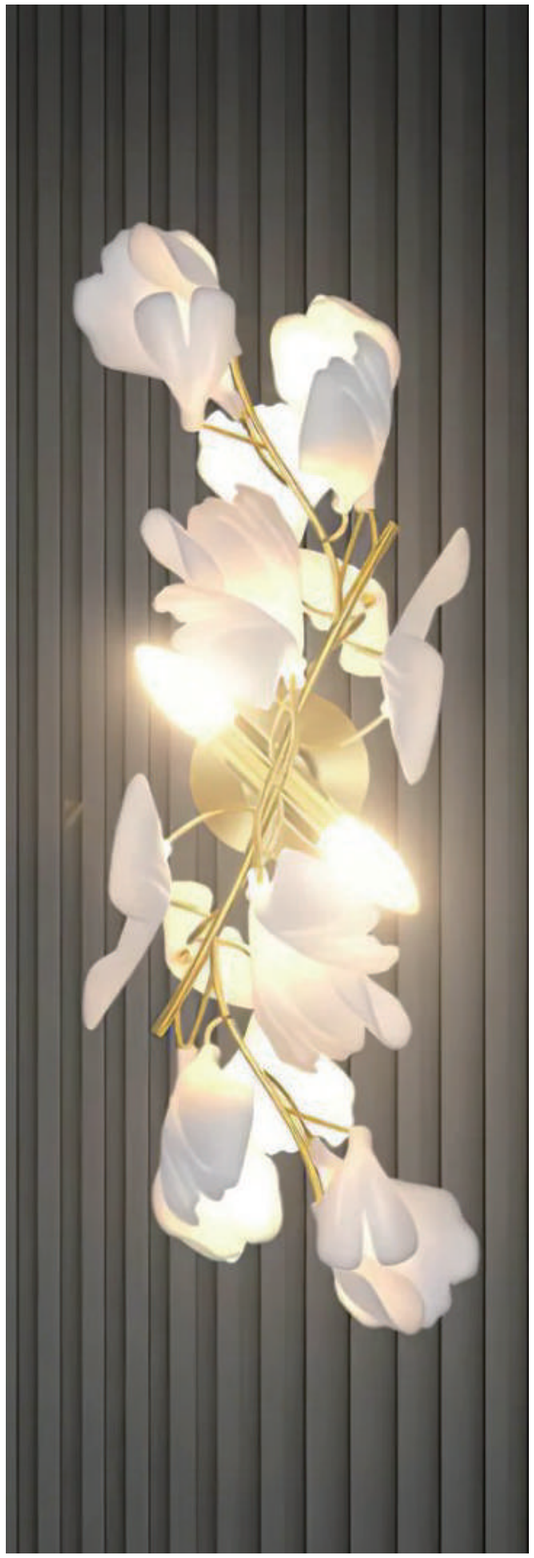

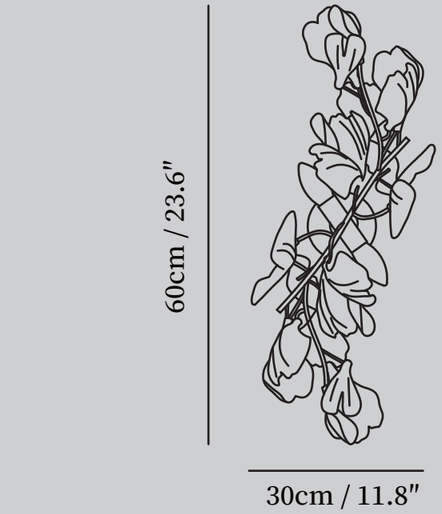

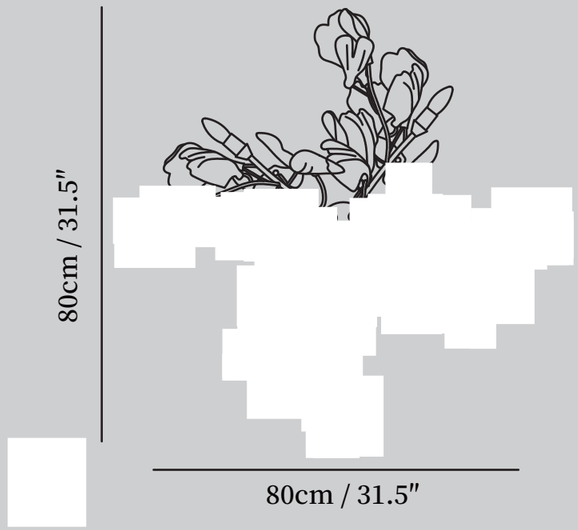

THECARGOODS.COM
SUPPORT@THECARGOODS.COM

all Lamp

VK

M l, Iron, Ceramics

Light source base type: G9

Body Finishes: Gold

Shade Finish: White

Size:

Dia 35cm x H 50cm / ∅ 13.8″ x H 19.7″ (G9*3)

Dia 40cm x H 60cm / ∅ 15.7″ x H 23.6″ (G9*2)

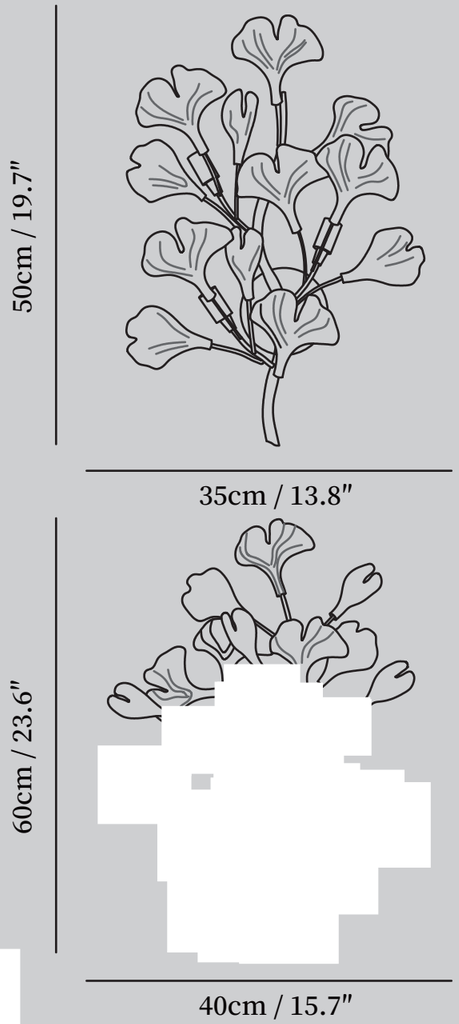

THECARGOODS.COM
SUPPORT@THECARGOODS.COM

Gingko Pendant Lamp

VKP-GPL-115

Materials: Brass, Glass, Ceramic

Light source base type: G9

Body Finishes: Gold

Shade Finish: White

Size:

Model A Dia 40cm x H 30cm / ∅ 15.7″ x H 11.8″

Model B Dia 40cm x H 30cm / ∅ 15.7″ x H 11.8″

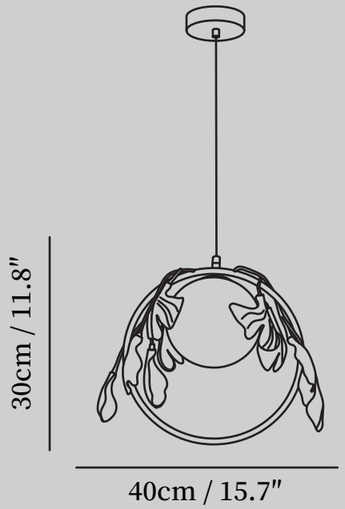

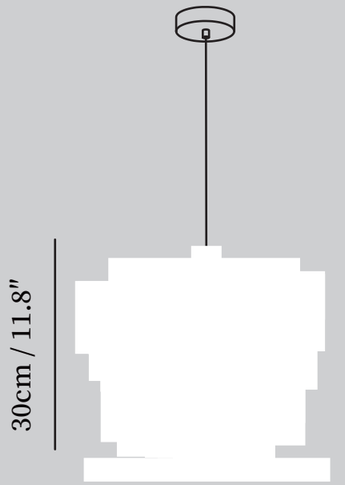

THECARGOODS.COM
SUPPORT@THECARGOODS.COM

Gingko Leaf Floor Lamp

VKF-GLFL-113

Materials: Hardware, Ceramics

Light source base type:G9

Body Finishes: Gold

Shade Finish: White

Size:

Dia 60cm x H 170cm / ∅ 23.6″ x H 66.9″ (G9*5)

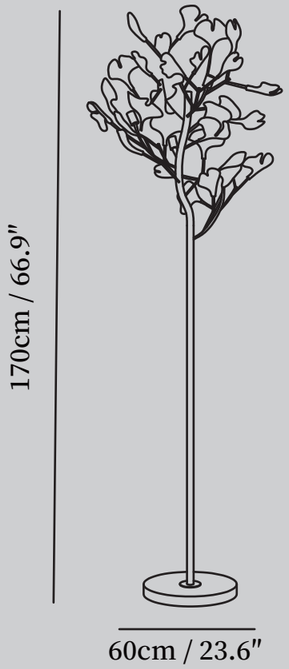

THECARGOODS.COM
SUPPORT@THECARGOODS.COM

Gi lass Ceiling Lamp

VKW-

Mat , Metal, Glass, Ceramic

Light source base type: E27 and G4

Body Finishes: Gold

Shade Finish: White

Size:

6+5 heads Dia 100cm x H 30cm / ∅ 39.4″ x H 11.8″

7+6 heads Dia 100cm x H 30cm / ∅ 39.4″ x H 11.8″

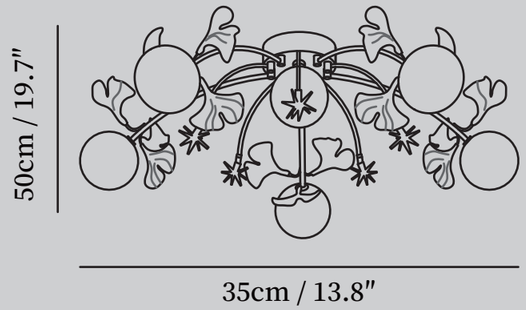

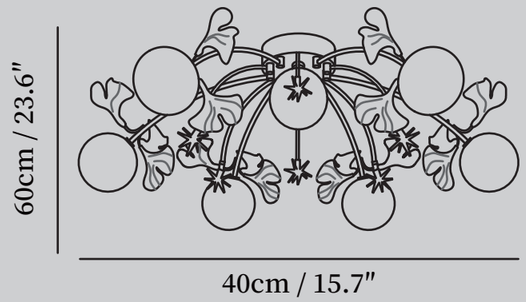

THECARGOODS.COM
SUPPORT@THECARGOODS.COM

eiling Lamp

VK

M l, Iron, Ceramics

Light source base type: G9

Body Finishes: Gold

Shade Finish: White Ceramic

Size:

Dia 36cm x H 25cm / ∅ 14.2″ x H 9.8″ (G9*2)

Dia 42cm x H 25cm / ∅ 16.5″ x H 9.8″ (G9*4)

Dia 52cm x H 25cm / ∅ 20.5″ x H 9.8″ (G9*4)

Dia 62cm x H 25cm / ∅ 24.4″ x H 9.8″ (G9*6)

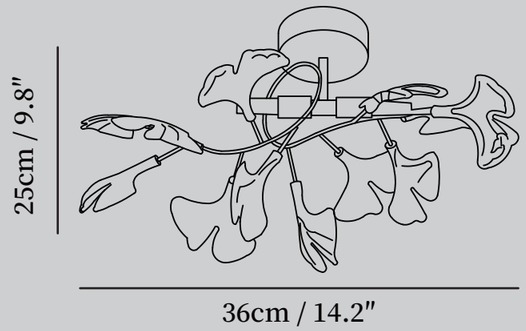

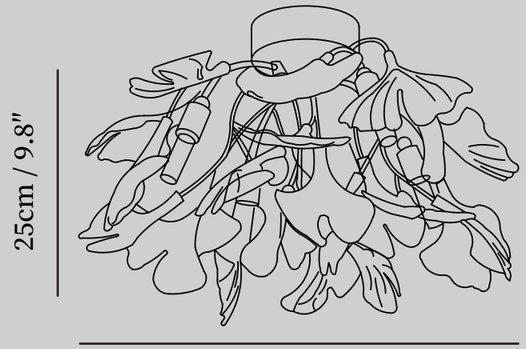

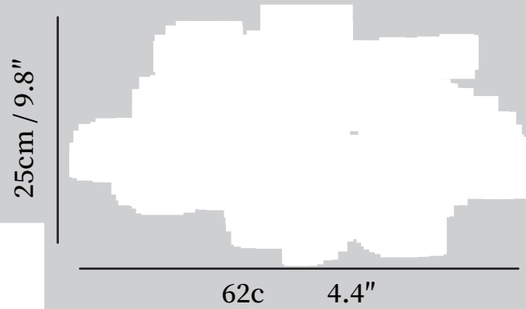

THECARGOODS.COM
SUPPORT@THECARGOODS.COM

Gingko Rotating Ceiling Lamp

VKC-6001-113

Materials: Iron, Ceramics

Light source base type: G9

Body Finishes: Gold

Shade Finish: White

Size:

Dia 60cm x H 40cm / ∅ 23.6″ x H 15.7″ (G9*)

Dia 60cm x H 35cm / ∅ 23.6″ x H 13.8″ (G9*6)

Dia 60cm x H 30cm / ∅ 23.6″ x H 11.8″ (G9*6)

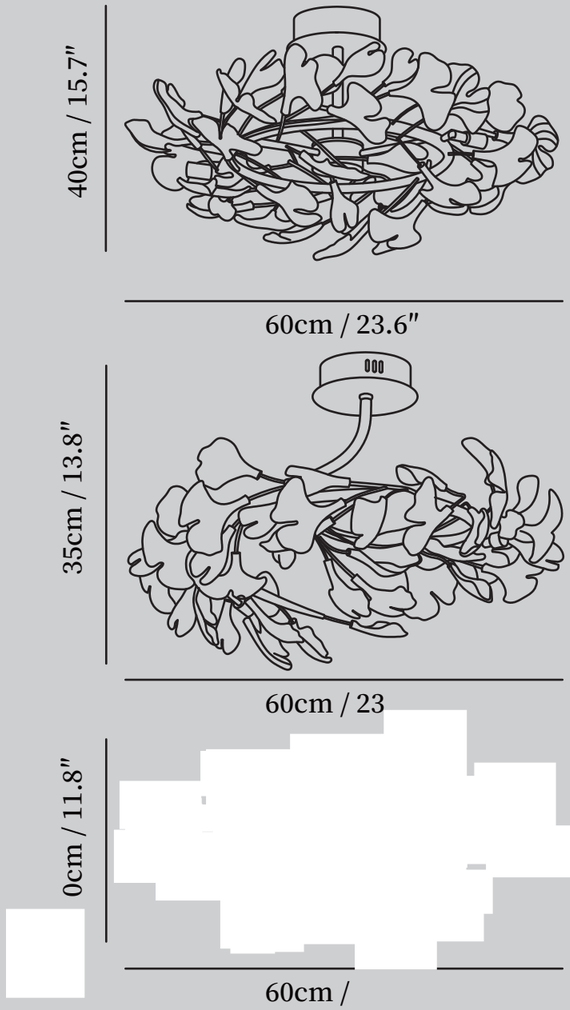

THECARGOODS.COM
SUPPORT@THECARGOODS.COM

Gingko Rotating Ceiling Lamp

VKC-6001-116

Materials: Iron, Ceramics

Light source base type: G9

Body Finishes: Gold

Shade Finish: White

Size:

Dia 80cm x H 30cm / ∅ 31.5″ x H 11.8″ (G9*)

Dia 100cm x H 30cm / ∅ 39.4″ x H 11.8″ (G9*10)

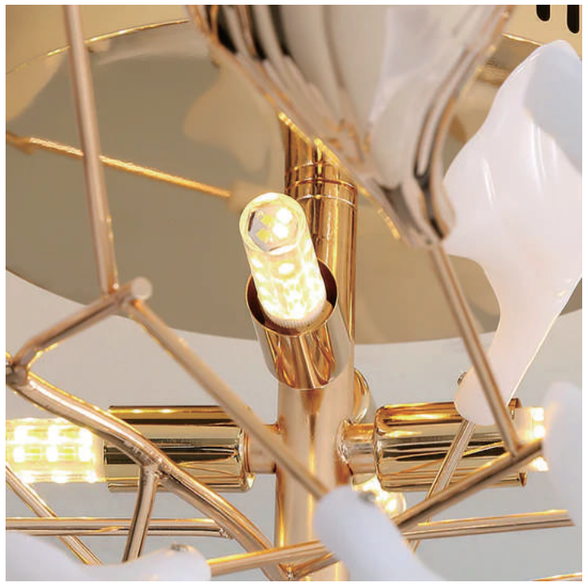

THECARGOODS.COM
SUPPORT@THECARGOODS.COM

Gold White Leaves Combination Gingko Chandeliers

VKC-YST001

Materials: Metal, Iron, Ceramics

Light source base type: G9

Body Finishes: Gold

Shade Finish: White

Size:

L 150cm x H 65cm / L 59.1″ x H 25.6″ (G9*12)

L 200cm x H 65cm / L 78.7″ x H 25.6″ (G9*18)

L 250cm x H 70cm / L 98.4″ x H 27.6″ (G9*24)

L 300cm x H 75cm / L 118.1″ x H 29.5″ (G9*30)

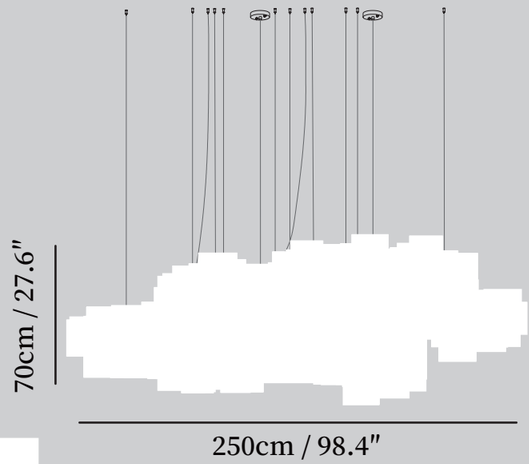

THECARGOODS.COM
SUPPORT@THECARGOODS.COM

Double Layer Combination Gingko Chandelier

VKC-DLCGC-114

Materials: Metal, Iron, Ceramics

Light source base type: G9

Body Finishes: Gold

Shade Finish: White

Size:

L 150cm x H 65cm / L 59.1″ x H 25.6″ (G9*12)

L 200cm x H 65cm / L 78.7″ x H 25.6″ (G9*18)

L 250cm x H 70cm / L 98.4″ x H 27.6″ (G9*24)

L 300cm x H 75cm / L 118.1″ x H 29.5″ (G9*30)

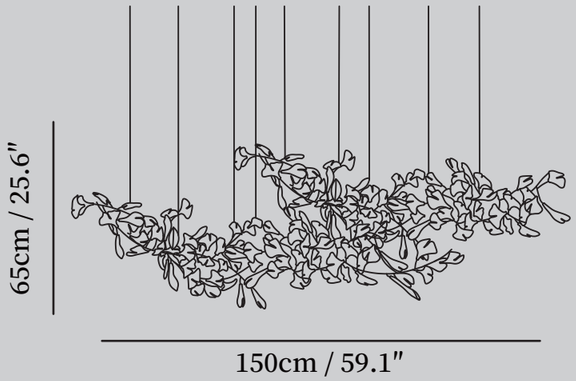

THECARGOODS.COM
SUPPORT@THECARGOODS.COM

Ginkgo Cloud Chandelier

VKC-GCC-1105

Materials: Iron, Ceramics

Light source base type: G9

Body Finishes: Gold

Shade Finish: White

Size:

L 200cm x H 60cm / L 78.7″ x H 23.6″ (G9*12)

L 250cm x H 60cm / L 98.4″ x H 23.6″ (G9*16)

L 300cm x H 60cm / L 118.1″ x H 23.6″ (G9*18)

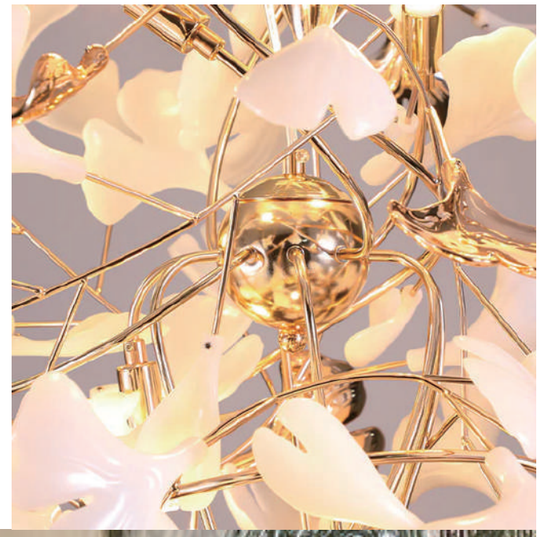

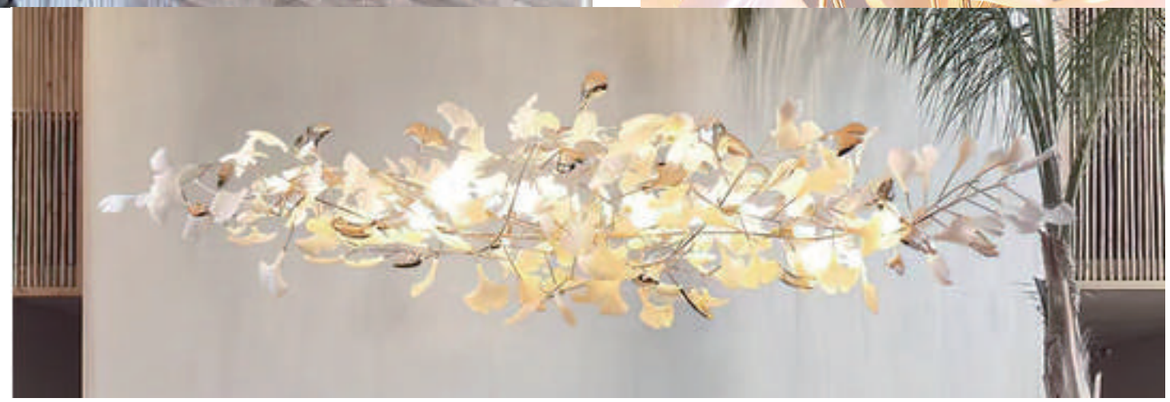

THECARGOODS.COM
SUPPORT@THECARGOODS.COM

Ginkgo Cloud Chandelier

VKC-GCC-1108

Materials: Iron, Ceramics

Light source base type: G9

Body Finishes: Gold

Shade Finish: White

Size:

L 200cm x H 80cm / L 78.7″ x H 31.5″ (G9*12)

L 250cm x H 100cm / L 98.4″ x H 39.4″ (G9*16)

L 300cm x H 120cm / L 118.1″ x H 47.2″ (G9*18)

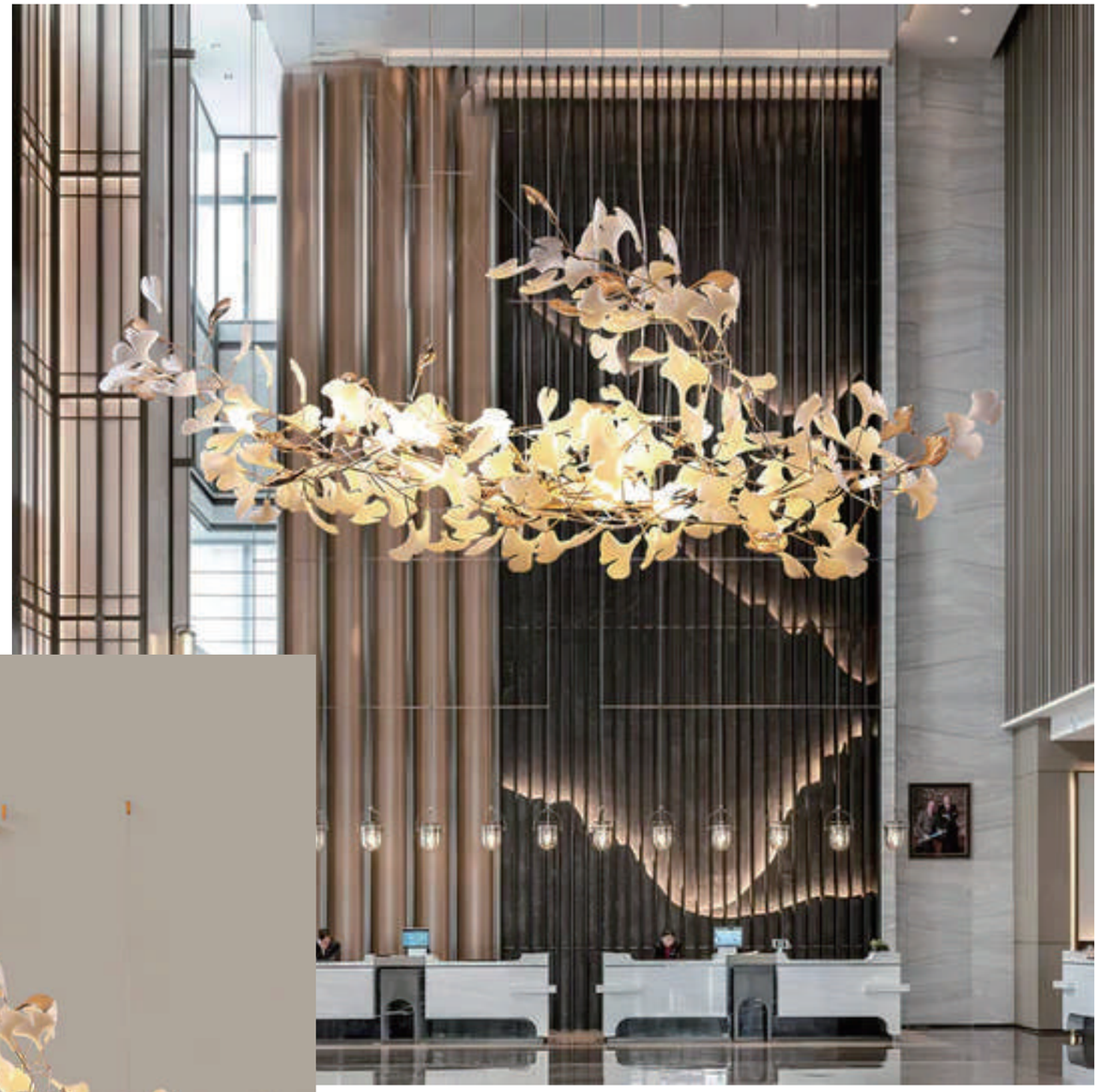

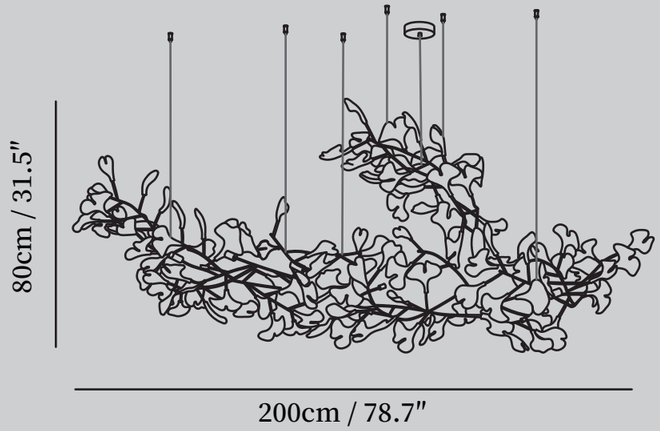

https://vakkerlight.com

THECARGOODS.COM
SUPPORT@THECARGOODS.COM

Ginkgo Tip Flying Chandelier

VKC-GTTC-119

Materials: Iron, Ceramics

Light source base type: G9

Body Finishes: Gold

Shade Finish: White

Size:

L 200cm x H 80cm / L 78.7″ x H 31.5″ (G9*12)

L 250cm x H 100cm / L 98.4″ x H 39.4″ (G9*16)

L 300cm x H 100cm / L 118.1″ x H 39.4″ (G9*18)

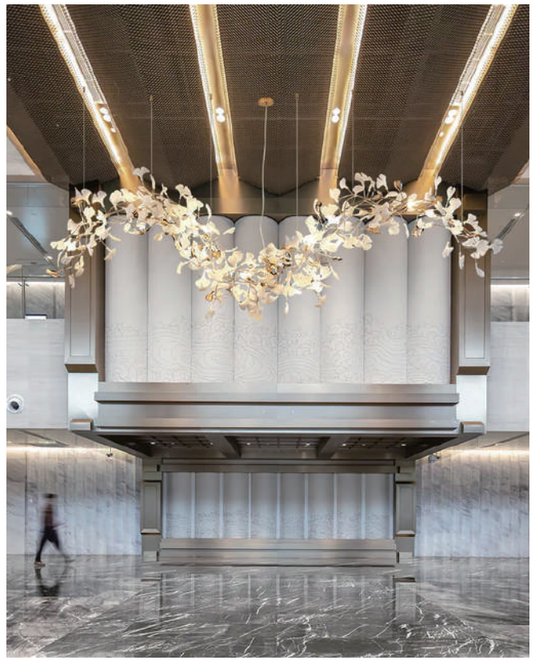

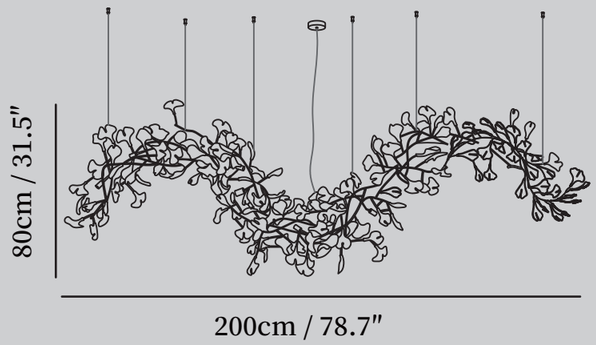

THECARGOODS.COM
SUPPORT@THECARGOODS.COM

Ginkgo Tip Flying Chandelier

VKC-GTTC-115

Materials: Iron, Ceramics

Light source base type: G9

Body Finishes: Gold

Shade Finish: White

Size:

L 100cm x H 150cm / L 39.4″ x H 59.1″ (G9*10)

L 120cm x H 200cm / L 47.2″ x H 78.7″ (G9*12)

L 120cm x H 250cm / L 47.2″ x H 98.4″ (G9*16)

L 150cm x H 300cm / L 59.1″ x H 118.1″ (G9*18)

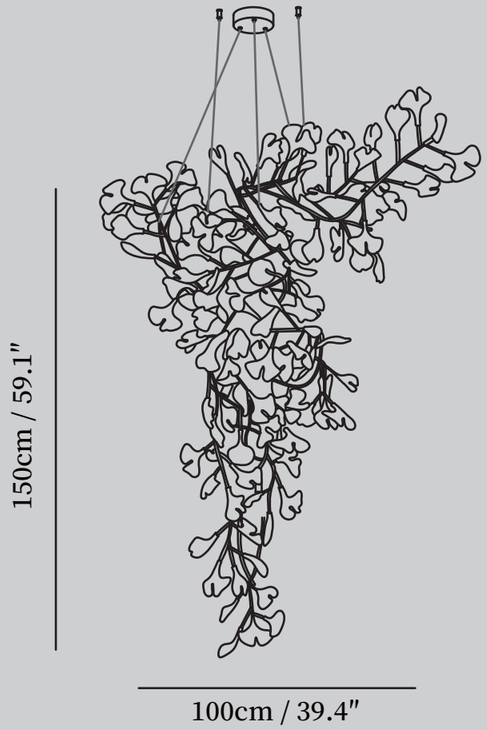

THECARGOODS.COM
SUPPORT@THECARGOODS.COM

Gi ombination Chandelier

VKC-

Ma al, Ceramics

Light source base type: G9

Body Finishes: Gold

Shade Finish: White

Size:

L 350cm x H 300cm / L 137.8″ x H 118.1″

https://vakkerlight.com

THECARGOODS.COM
SUPPORT@THECARGOODS.COM

Gi Long Branch Chandelier

VKC-

Ma tal, Ceramics

Light source base type: G9

Body Finishes: Gold

Shade Finish: White

Size:

L 80cm x H 198cm / L 31.5″ x H 78″

L 80cm x H 250cm / L 31.5″ x H 98.4″

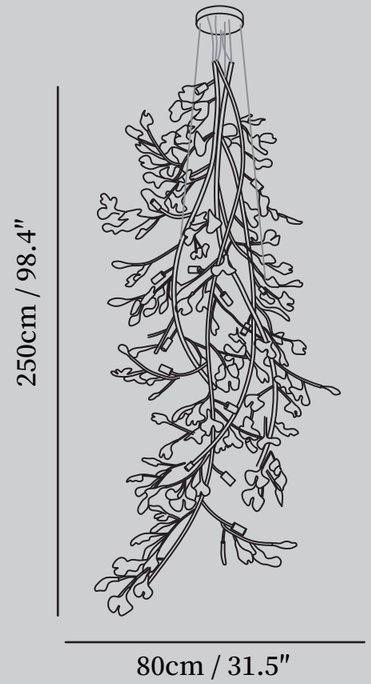

https://vakkerlight.com

THECARGOODS.COM
SUPPORT@THECARGOODS.COM

Gingko Ojo chandelier

VKC-6015-113

Materials: Iron, Ceramics

Light source base type: G9

Body Finishes: Gold

Shade Finish: White

Size:

Dia 60cm x H 150cm / ∅ 23.6″ x H 59.1″ (G9*10)

Dia 70cm x H 200cm / ∅ 27.6″ x H 78.7″ (G9*12)

Dia 80cm x H 250cm / ∅ 31.5″ x H 98.4″ (G9*16)

Dia 100cm x H 300cm / ∅ 39.4″ x H 118.1″ (G9*18)

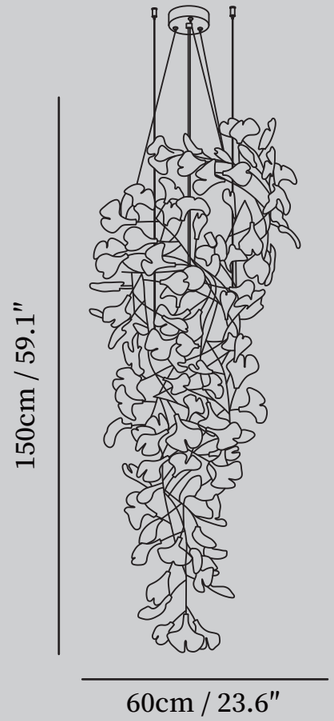

THECARGOODS.COM
SUPPORT@THECARGOODS.COM

Chandelier A

VK

M etal, Iron, Ceramics

Light source base type: G9

Body Finishes: Gold

Shade Finish: White

Size:

L 60cm x W 40cm / L 23.6″ x W 15.7″ (G9*6)

L 80cm x W 40cm / L 31.5″ x W 15.7″ (G9*8)

L 100cm x W 40cm / L 39.3″ x W 15.7″ (G9*10)

L 120cm x W 40cm / L 47.2″ x W 15.7″ (G9*9)

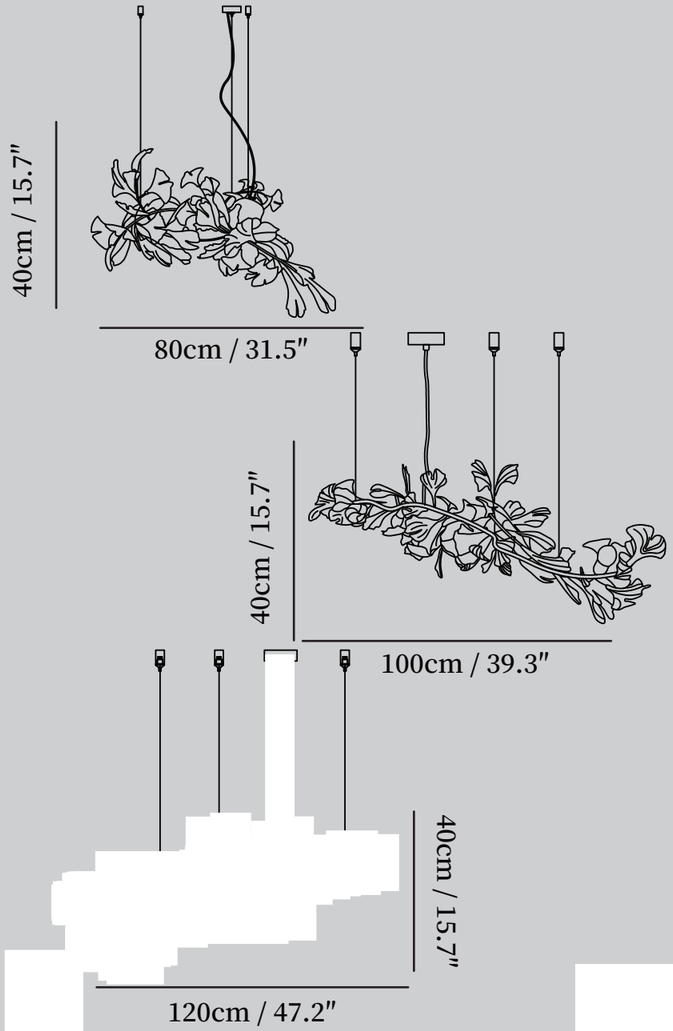

THECARGOODS.COM
SUPPORT@THECARGOODS.COM

handelier B

VK

M l, Iron, Ceramics

Light source base type: G9

Body Finishes: Gold

Shade Finish: White

Size:

L 100cm x H 150cm / L 39.3″ x H 59.1″ (G9*8)

L 120cm x H 150cm / L 47.2″ x H 59.1″ (G9*10)

L 150cmx H 150cm / L 59.1″ x H 59.1″ (G9*12)

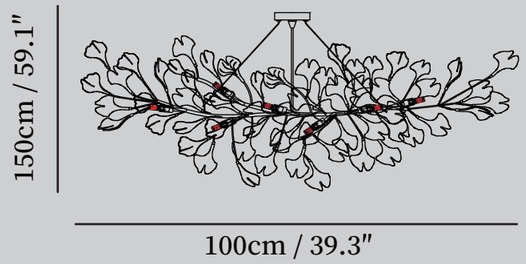

THECARGOODS.COM
SUPPORT@THECARGOODS.COM

handelier C

VK

M l, Iron, Ceramics

Light source base type: G9

Body Finishes: Gold

Shade Finish: White

Size:

L 200cm x H 200cm / L 78.7″ x H 78.7″ (G9*15)

L 250cm x H 200cm / L 98.4″ x H 78.7″ (G9*18)

L 300cm x H 200cm / L 118.1″ x H 78.7″ (G9*20)

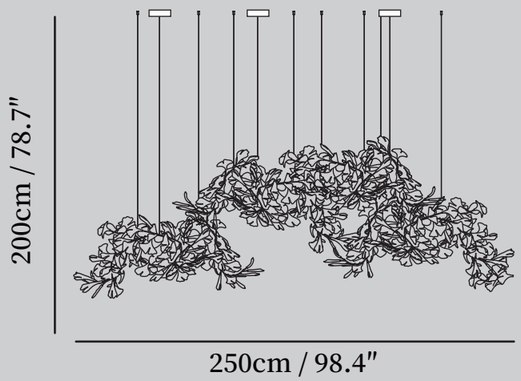

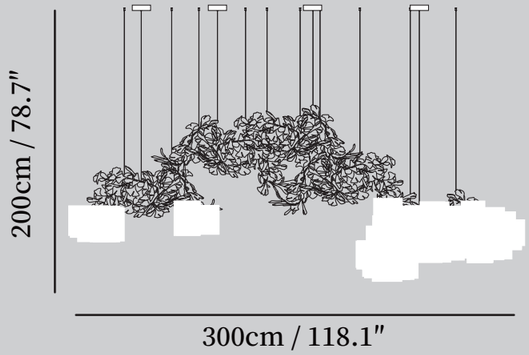

https://vakkerlight.com

THECARGOODS.COM
SUPPORT@THECARGOODS.COM

Gingko Chandelier D

VKC-GCD-113

Materials: Hardware, Ceramics

Light source base type: G9

Body Finishes: Gold

Shade Finish: White

Size:

L 80cm x H 35cm / L 31.5″ x H 13.8″ (G9*6)

L 100cm x H 40cm / L 39.4″ x H 15.7″ (G9*8)

L 120cm x H 40cm / L 47.2″ x H 15.7″ (G9*10)

L 150cm x H 45cm / L 59.1″ x H 17.7″ (G9*12)

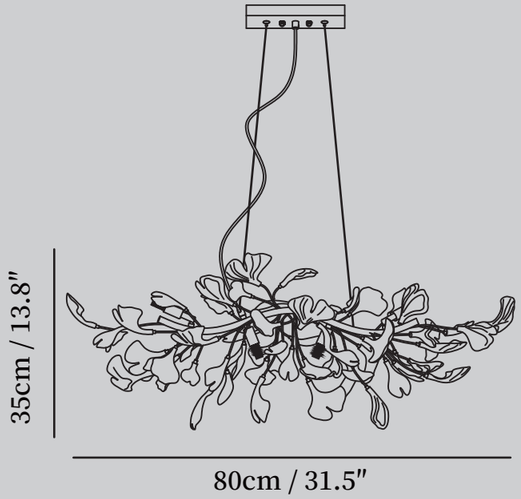

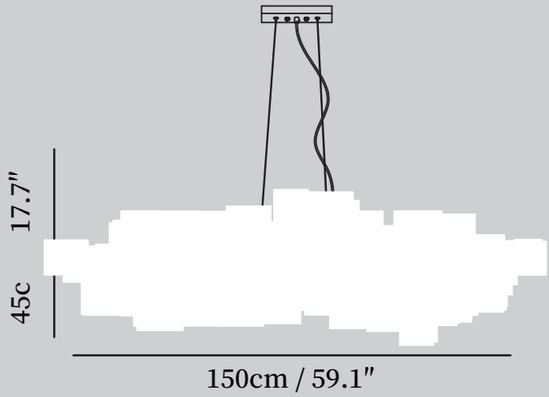

THECARGOODS.COM
SUPPORT@THECARGOODS.COM

handelier E

VK

M l, Iron, Ceramics

Light source base type: G9

Body Finishes: Gold

Shade Finish: White

Size:

L 150cm x H 68cm / L 59.1″ x H 26.8″ (G9*12)

L 200cm x H 68cm / L 78.7″ x H 26.8″ (G9*18)

L 250cm x H 75cm / L 98.4″ x H 29.5″ (G9*24)

L 300cm x H 75cm / L 118.1″ x H 29.5″ (G9*30)

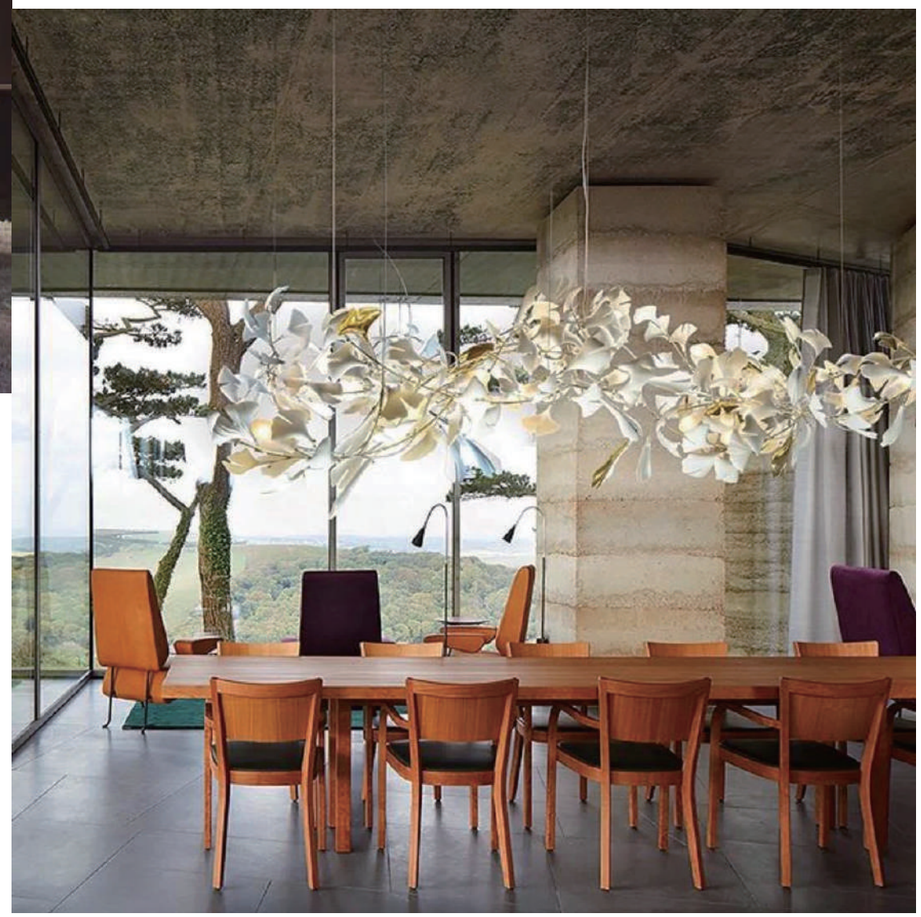

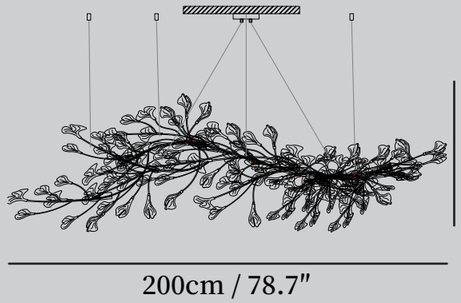

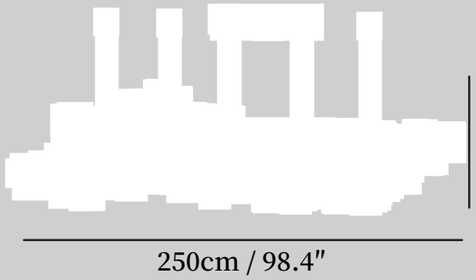

THECARGOODS.COM
SUPPORT@THECARGOODS.COM

handelier F

VK

M l, Iron, Ceramics

Light source base type: G9

Body Finishes: Gold

Shade Finish: White

Size:

Dia 80cm x H 150cm / ∅ 31.4″ x H 59.1″ (G9*18)

Dia 100cm x H 200cm / ∅ 39.3″ x H 78.7″ (G9*25)

Dia 120cm x H 250cm / ∅ 47.2″ x H 98.4″ (G9*35)

Dia 120cm x H 300cm / ∅ 47.2″ x H 118″ (G9*45)

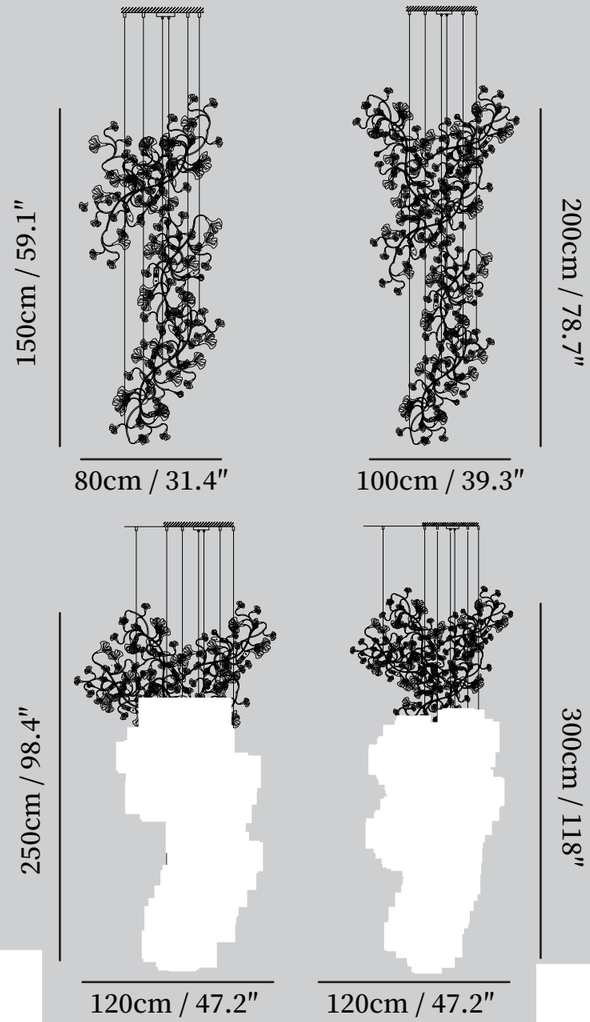

THECARGOODS.COM
SUPPORT@THECARGOODS.COM

handelier G

VK

M l, Iron, Ceramics

Light source base type: G9

Body Finishes: Gold

Shade Finish: White

Size:

L 100cm x H 150cm / L 39.4″ x H 59.1″ (G9*6)

L 120cm x H 150cm / L 47.2″ xx H 59.1″ (G9*9)

L 130cm x H 150cm / L 51.1″ x H 59.1″ (G9*10)

L 150cm x H 150cm / L 59.1″ x H 59.1″ (G9*10)

L 160cm x H 150cm / L 63″ x H 59.1″ (G9*12)

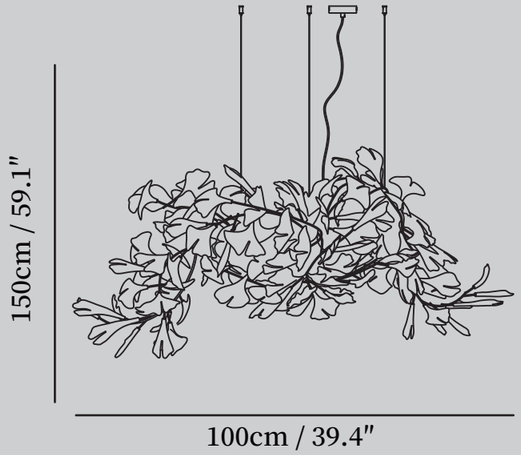

https://vakkerlight.com

THECARGOODS.COM
SUPPORT@THECARGOODS.COM

Gingko Chandelier H

VKC-6009-118

Materials: Iron, Ceramics

Light source base type: G9

Body Finishes: Gold

Shade Finish: White

Size:

L 80cm x H 30cm / L 31.5″ x H 11.8″ (G9*6)

L 100cm x H 30cm / L 39.4″ x H 11.8″ (G9*6)

L 120cm x H 30cm / L 47.2″ x H 11.8″ (G9*8)

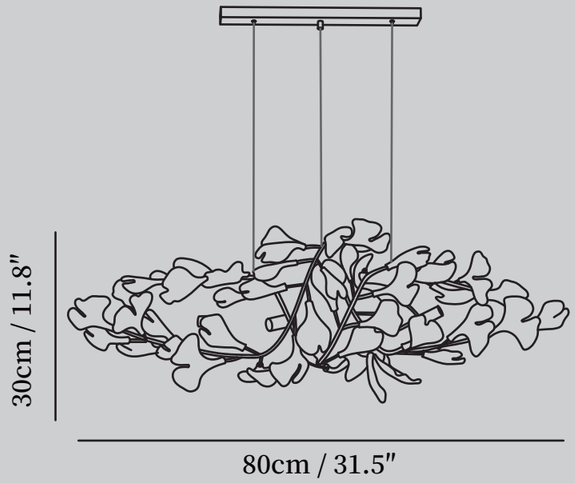

THECARGOODS.COM
SUPPORT@THECARGOODS.COM

Gingko Chandelier H

VKC-6009-121

Materials: Iron, Ceramics

Light source base type: G9

Body Finishes: Gold

Shade Finish: White

Size:

Dia 60cm x H 40cm / ∅ 23.6″ x H 15.7″ (G9*4)

Dia 80cm x H 40cm / ∅ 31.5″ x H 15.7″ (G9*6)

Dia 100cm x H 40cm / ∅ 39.4″ x H 15.7″ (G9*8)

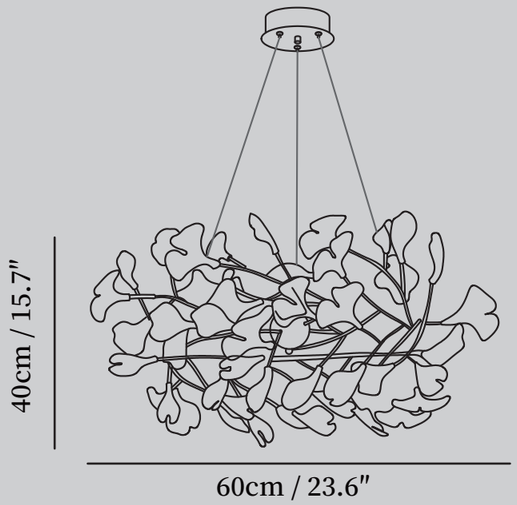

https://vakkerlight.com

THECARGOODS.COM
SUPPORT@THECARGOODS.COM

Gingko Chandelier I

VKC-1007PA-123

Materials: Brass, Ceramics

Light source base type: G9

Body Finishes: Copper

Shade Finish: White

Size:

L 105cm x H 35cm / L 41.3″ x H 13.8″ (G9*8)

L 125cm x H 45cm / L 49.2″ x H 17.7″ (G9*10)

L 150cm x H 45cm / L 59.1″ x W 31.5″ (G9*12)

L 180cm x H 45cm / L 70.9″ x H 17.7″ (G9*14)

L 110cm x H 30cm / L 43.3″ x H 11.8″ (G9*6)

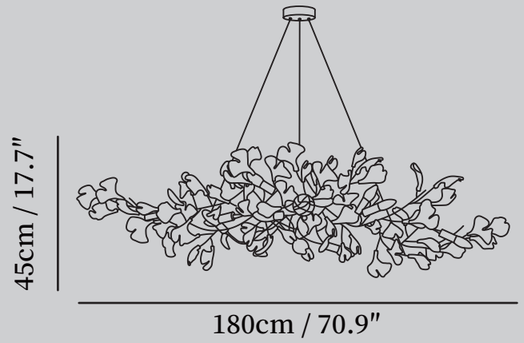

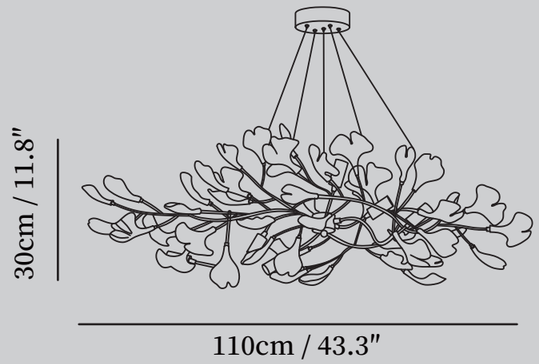

THECARGOODS.COM
SUPPORT@THECARGOODS.COM

Gingko Chandelier J

VKC-1007CL-123

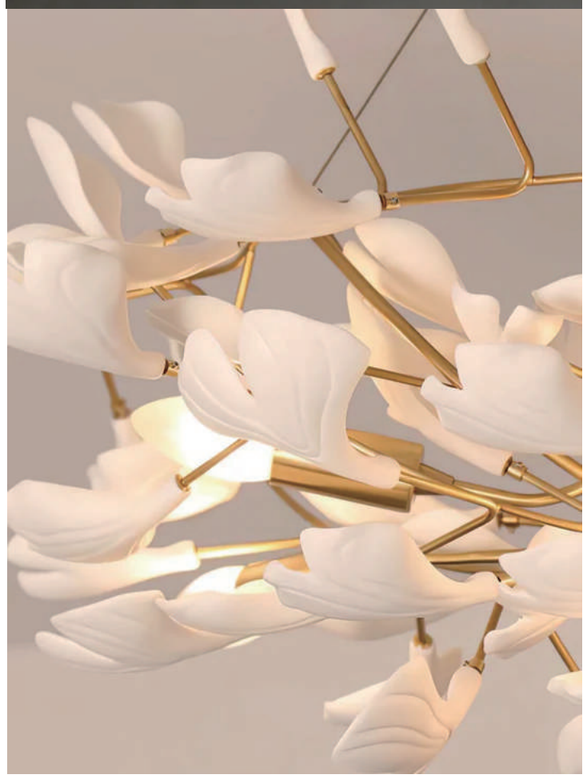

Materials: Brass, Ceramics

Light source base type: G9

Body Finishes: Copper

Shade Finish: White

Size:

Dia 65cm x H 40cm / ∅ 25.6″ x H 15.7″ (G9*6)

Dia 85cm x H 40cm / ∅ 33.5″ x H 15.7″ (G9*8)

Dia 105cm x H 40cm / ∅ 41.3″ x H 15.7″ (G9*12)

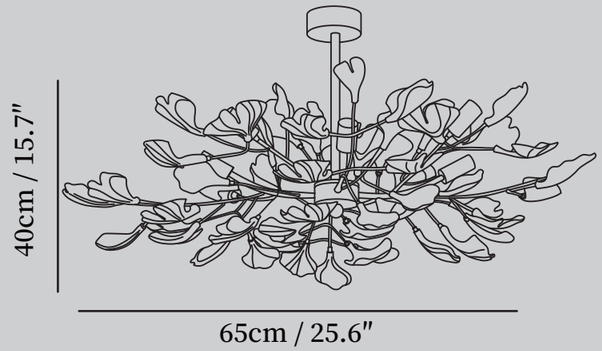

THECARGOODS.COM
SUPPORT@THECARGOODS.COM

Gin Chandelier K

VKC-YST

Mater al, Iron, Ceramics

Light source base type: G9

Body Finishes: Gold

Shade Finish: White

Size:

L 100cm x H 150cm / L 39.4″ x H 59.1″ (G9*8)

L 120cm x H 150cm / L 47.2″ x H 59.1″ (G9*10)

L 150cm xx H 150cm / L 59.1″ x H 59.1″ (G9*12)

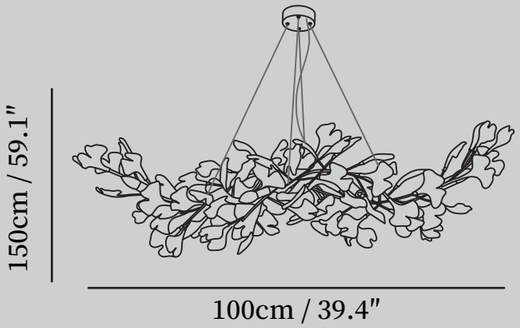

THECARGOODS.COM
SUPPORT@THECARGOODS.COM

Gingko Chandelier L

VKC-GCL-114

Materials: Hardware, Ceramic

Light source base type: G9

Body Finishes: Gold

Shade Finish: White

Size:

Dia 60cm x H 30cm / ∅ 23.6″ x H 11.8″ (G9*6)

Dia 80cm x H 30cm / ∅ 31.5″ x H 11.8″ (G9*8)

Dia 100cm x H 30cm / ∅ 39.3″ x H 11.8″ (G9*10)

Dia 120cm x H 30cm / ∅ 47.2″ x H 11.8″ (G9*12)

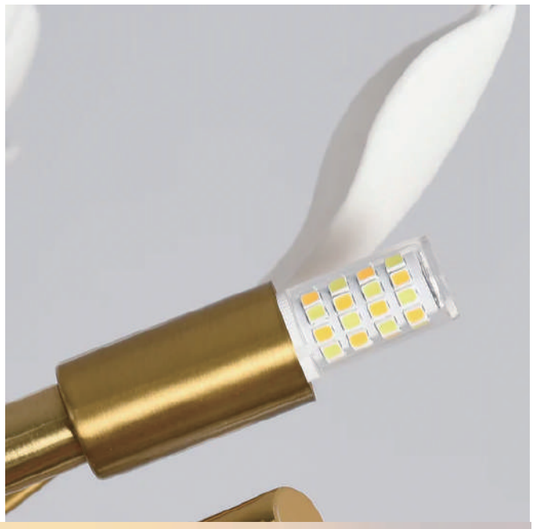

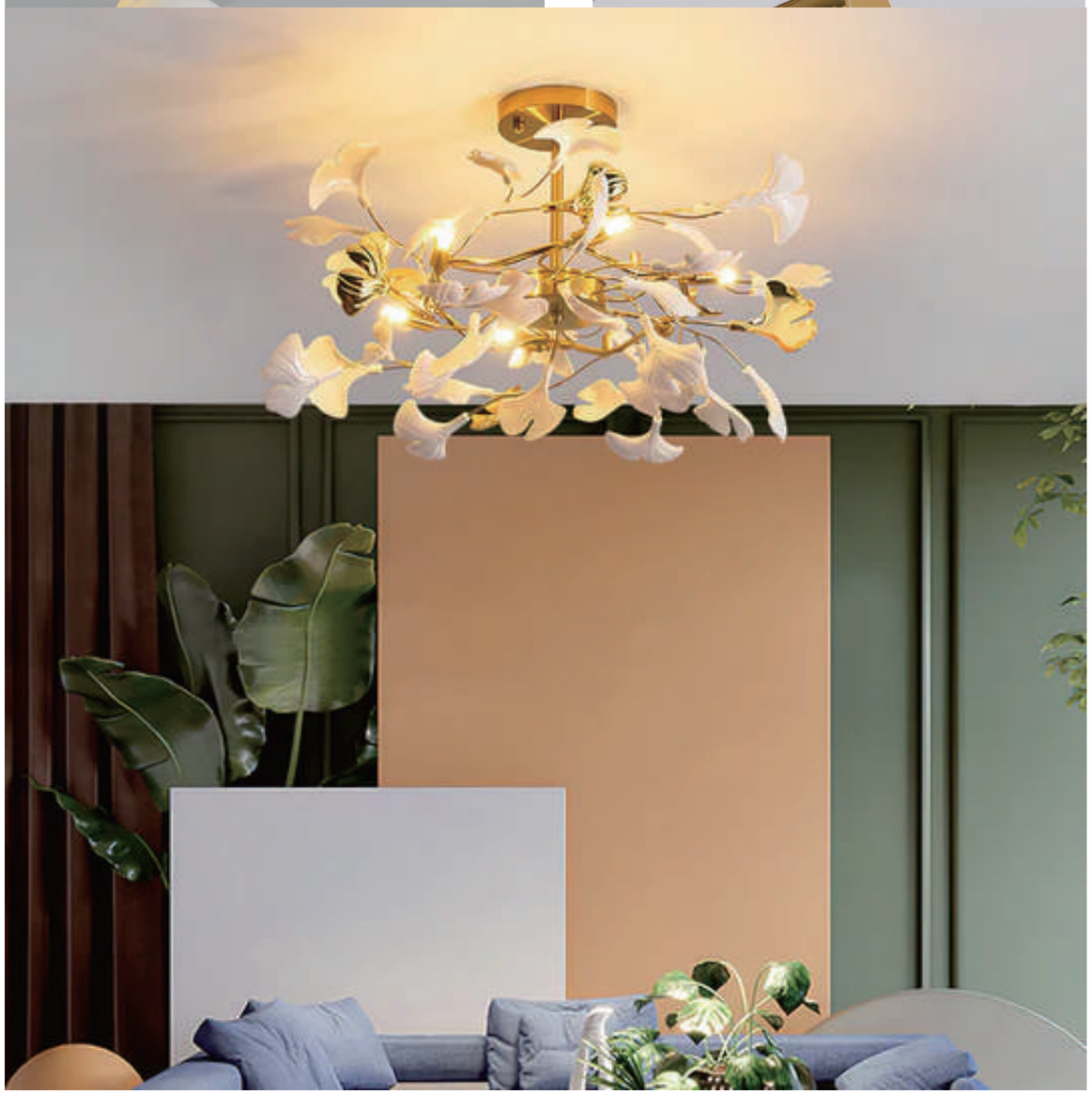

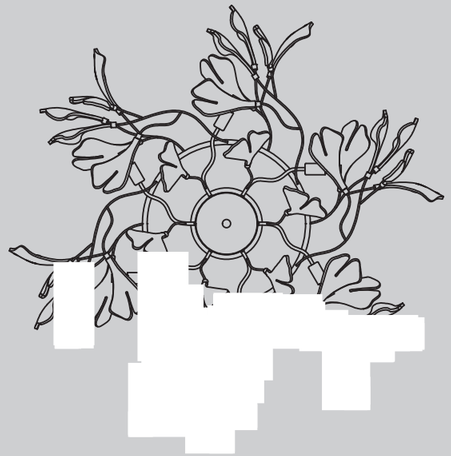

https://vakkerlight.com

THECARGOODS.COM
SUPPORT@THECARGOODS.COM

Gingko Chandelier M

BEIJIAN1000-4

Materials: Metal, Iron, Ceramics

Light source base type: G9

Body Finishes: Gold

Shade Finish: White

Size:

L 100cm x W 30cm / L 39.4″ x W 11.8″ (G9*4)

L 120cm x W 30cm / L 47.2″ x W 11.8″ (G9*6)

L 150cm x W 30cm / L 59.1″ x W 11.8″ (G9*8)

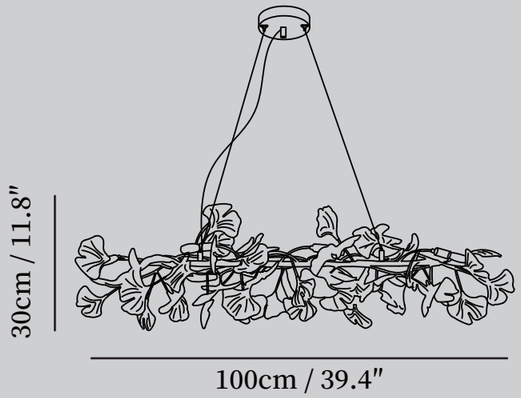

THECARGOODS.COM
SUPPORT@THECARGOODS.COM

handelier N

VK

M l, Iron, Ceramics

Light source base type: G9

Body Finishes: Gold

Shade Finish: White

Size:

L 100cm x H 150cm / L 39.4″ x H 59.1″ (G9*8)

L 120cm x H 150cm / L 47.2″ x H 59.1″ (G9*10)

L 150cm x H 150cm / L 59.1″ x H 59.1″ (G9*12)

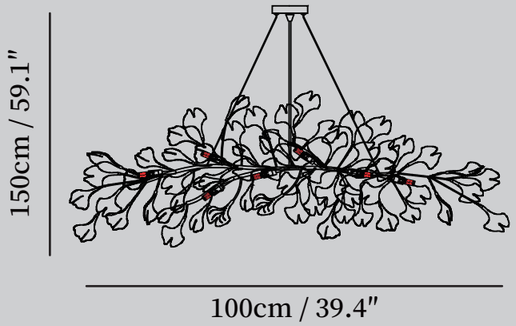

THECARGOODS.COM
SUPPORT@THECARGOODS.COM

Gingko Chandelier O

BEIJIAN600-6

Materials: Metal, Iron, Ceramics

Light source base type: G9

Body Finishes: Gold

Shade Finish: White

Size:

Dia 60cm x H 30cm / ∅ 23.6″ x H 11.8″(G9*6)

Dia 80cm x H 30cm / ∅ 31.5″ x H 11.8″ (G9*8)

Dia 100cm x H 30cm / ∅ 39.4″ x H 11.8″ (G9*10)

Dia 125cm x H 30cm / ∅ 49.2″ x H 11.8″ (G9*12)

Dia 150cm x H 30cm / ∅ 59.1″ x H 11.8″ (G9*16)

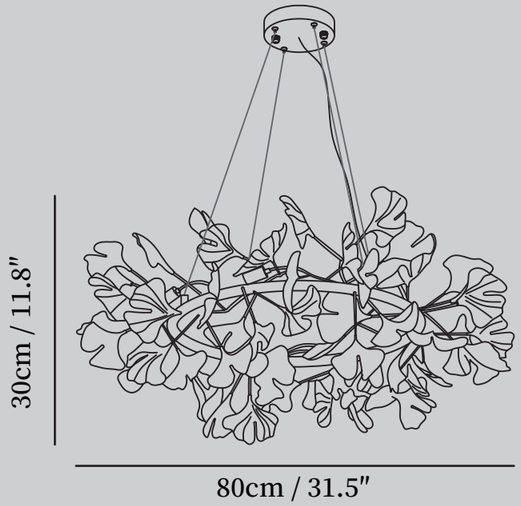

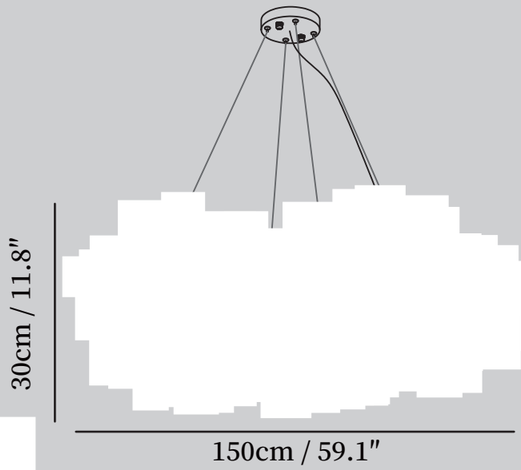

THECARGOODS.COM
SUPPORT@THECARGOODS.COM

Gingko Chandelier P

VKC-GCP-114

Materials: Iron, Ceramic

Light source base type: G9

Body Finishes: Gold

Shade Finish: White

Size:

Dia 60cm x H 30cm / ∅ 23.6″ x H 11.8″

Dia 80cm x H 30cm / ∅ 31.5″ x H 11.8″

Dia 100cm x H 30cm / ∅ 39.3″ x H 11.8″

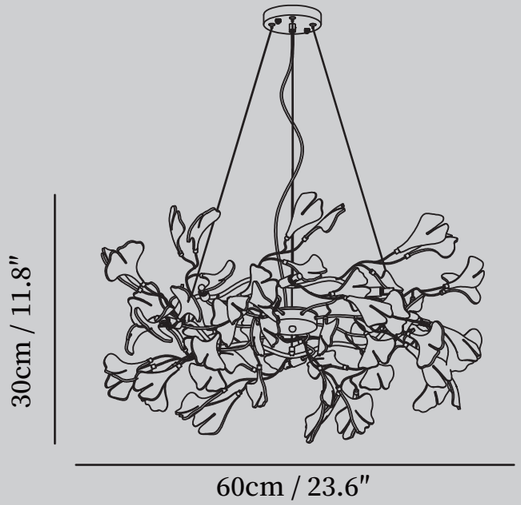

THECARGOODS.COM
SUPPORT@THECARGOODS.COM

Gi[redacted]andelier Q

BEIJIAN[redacted]

Mater[redacted]n, Ceramics

Light source base type: G9

Body Finishes: Gold

Shade Finish: White

Size:

Dia 80cm x H 200cm / ∅ 31.5″ x H 78.7″(G9*16)

Dia 100cm x H 250cm / ∅ 39.4″ x H 98.4″ (G9*24)

Dia 120cm x H 300cm / ∅ 47.2″ x H 118.1″ (G9*32)

Dia 150cm x H 350cm / ∅ 59.1″ x H 137.8″ (G9*42)

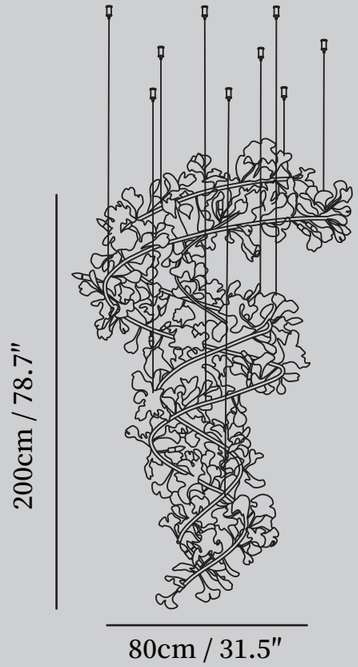

THECARGOODS.COM
SUPPORT@THECARGOODS.COM

Gingko Chandelier R

VKC-6009-113

Materials: Iron, Ceramics

Light source base type: G9

Body Finishes: Gold

Shade Finish: White

Size:

L 80cm x H 40cm / L 31.5″ x H 15.7″ (G9*6)

L 125cm x H 40cm / L 49.2″ x H 15.7″ (G9*8)

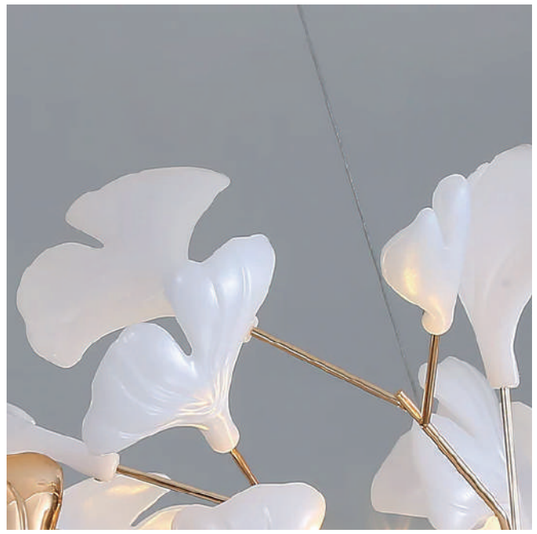

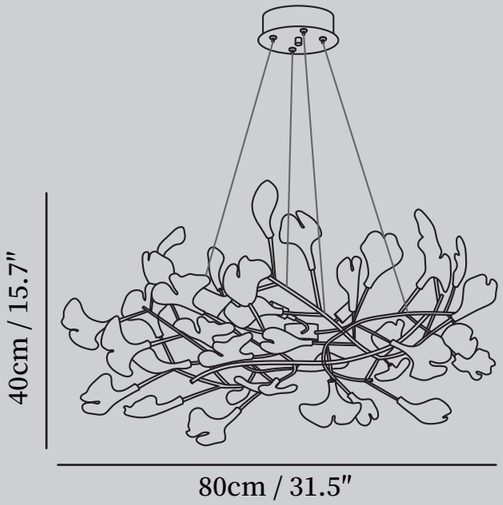

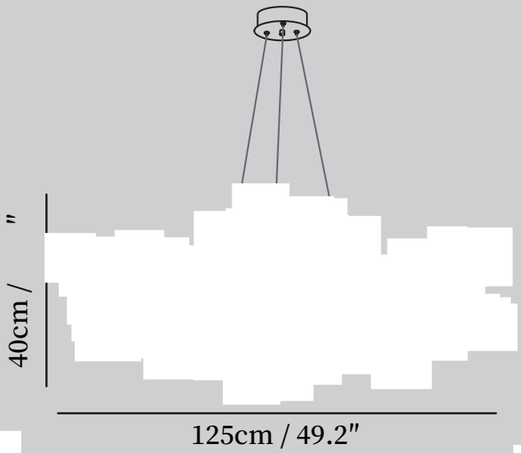

THECARGOODS.COM
SUPPORT@THECARGOODS.COM

Gingko Chandelier R

VKC-6009-113

Materials: Iron, Ceramics

Light source base type: G9

Body Finishes: Gold

Shade Finish: White

Size:

L 100cm x H 40cm / L 39.4" x H 15.7" (G9*6)

L 120cm x H 45cm / L 47.2" x H 17.7" (G9*8)

L 150cm x H 45cm / L 59.1" x H 17.7" (G9*8)

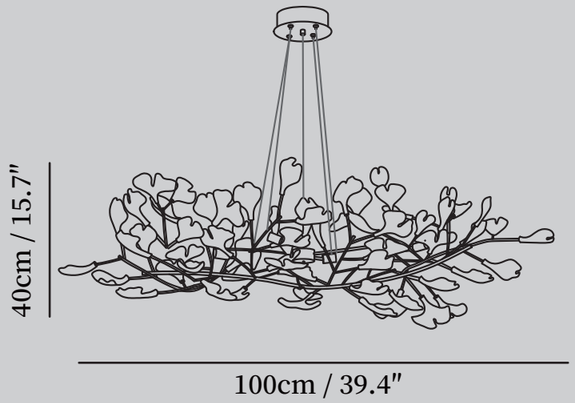

THECARGOODS.COM
SUPPORT@THECARGOODS.COM

Gi handelier S

BEIJIAN

Mater l, Iron, Ceramics

Light source base type: G9

Body Finishes: Gold

Shade Finish: White

Size:

L 100cm x H 45cm / L 39.4″ x H 17.7″ (G9*8)

L 120cm x H 48cm / L 47.2″ x H 18.9″ (G9*10)

L 130cm x H 48cm / L 51.2″ x H 18.9″ (G9*10)

L 150cm x H 50cm / L 59.1″ x H 19.7″ (G9*12)

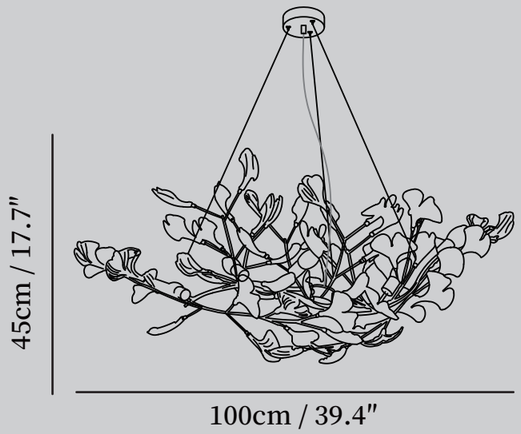

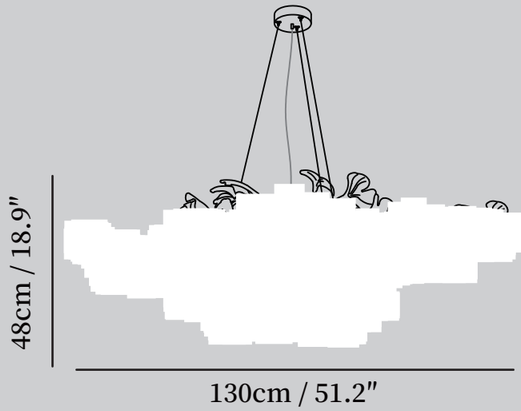

THECARGOODS.COM
SUPPORT@THECARGOODS.COM

Chandelier U

VK

M tal, Iron, Ceramics

Light source base type: G9

Body Finishes: Gold

Shade Finish: White

Size:

Dia 60cm x H 30cm / ∅ 23.6″ x H 11.8″ (G9*6)

Dia 80cm x H 30cm / ∅ 31.5″ x H 11.8″ (G9*8)

Dia 100cm x H 30cm / ∅ 39.3″ x H 11.8″ (G9*10)

Dia 120cm x H 30cm / ∅ 47.2″ x H 11.8″ (G9*12)

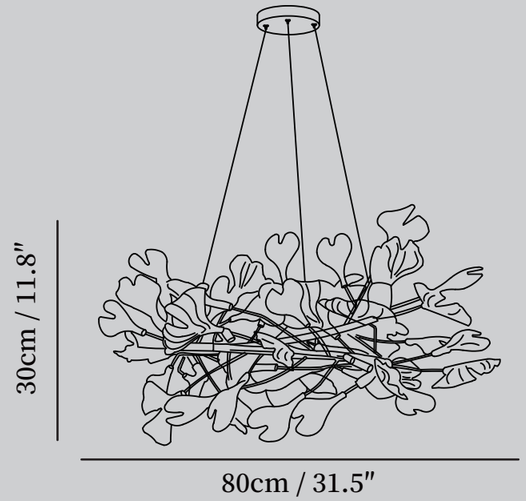

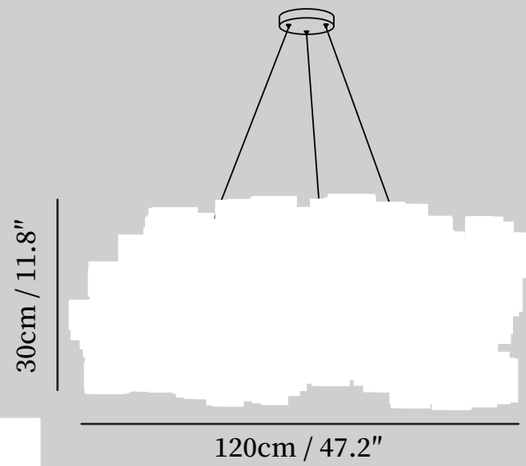

https://vakkerlight.com